AM Demodulation and the Superheterodyne Receiver

EELE445-14

Lecture 28-29

MONTANA STATE UNIVERSITY

Mountains & Minds

Figure 4–29 Superheterodyne receiver.

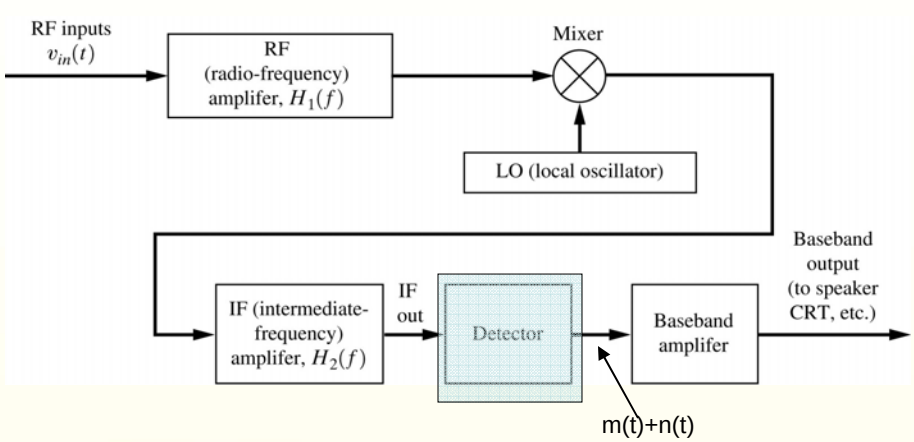

©2007 Pearson Education, Inc. All rights reserved. 0-13-142492-0

Product Detection 4-13

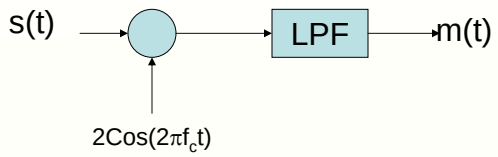

- Only method for DSB-SC, USB-SC, LSB-SC
- AM with carrier
  - Envelope Detection – Input SNR >~10 dB required
  - Synchronous Detection – (no threshold effect)
- Note the 2 on the LO normalizes the output amplitude

Figure 4–24 PLL used for coherent detection of AM.

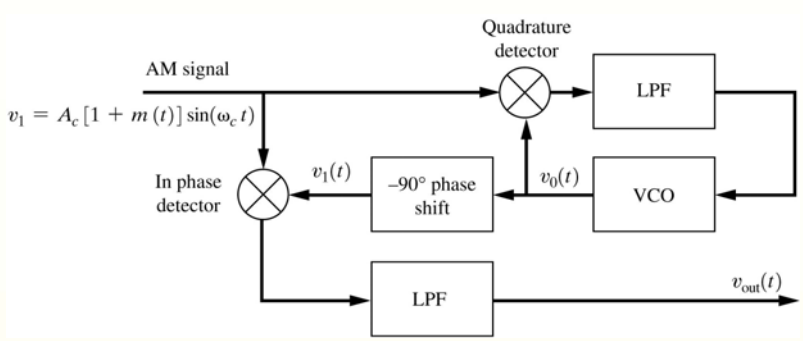

©2007 Pearson Education, Inc. All rights reserved. 0-13-142492-0

Envelope Detector 4-13

$C \bullet A_c \bullet (1 + a \bullet m(t))$

Where C is a constant

$C \bullet A_c \bullet a \bullet m(t))$

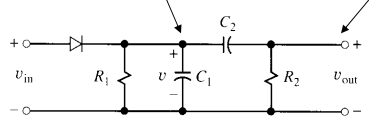

(a)

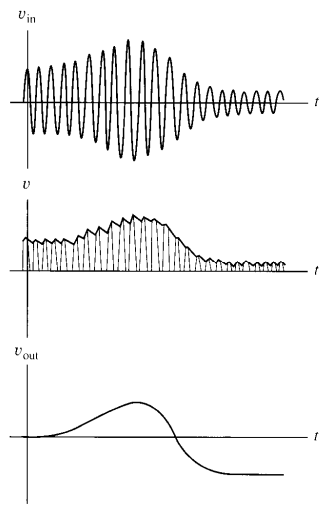

(b)

$$W \ll \frac{1}{R_1 C_1} \ll f_c$$

STATE UNIVERSITY

Mountains & Minds

Envelope Detector Distortion

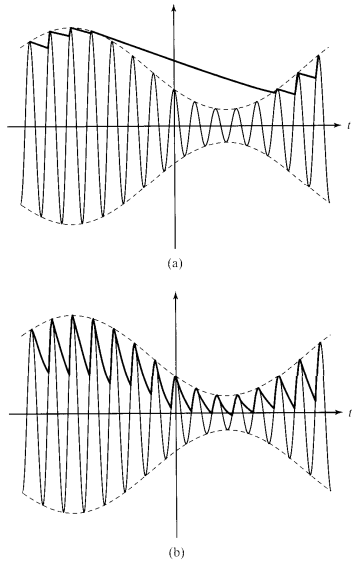

Hi Frequency m(t)
Slope overload

IF Frequency
Present in
Output signal

Figure 3.28 Effect of (a) large and (b) small RC values on the performance of the envelope detector.

MONTANA STATE UNIVERSITY

Mountains & Minds

Superheterodyne Receiver

EELE445-14

MONTANA STATE UNIVERSITY

Mountains & Minds

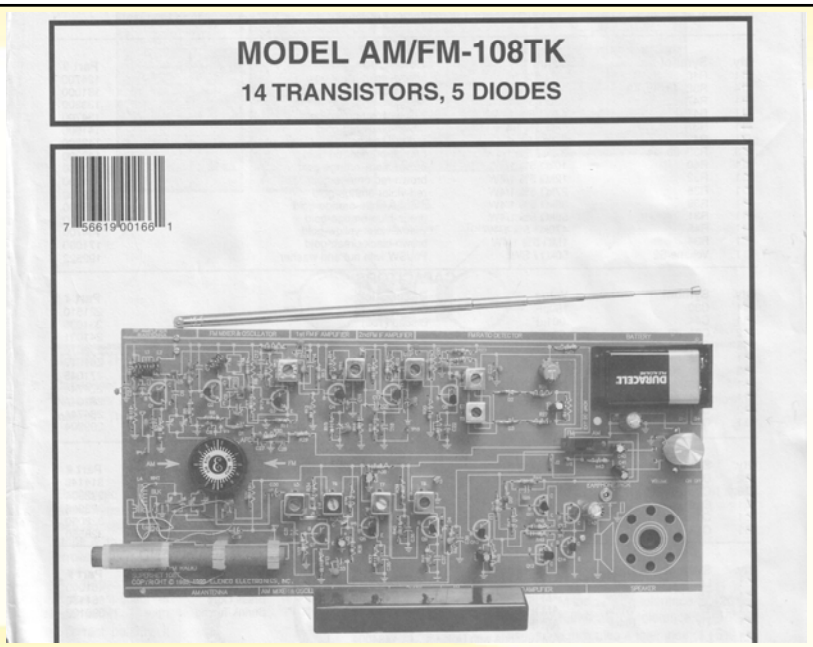

MONTANA STATE UNIVERSITY

Mountains & Minds

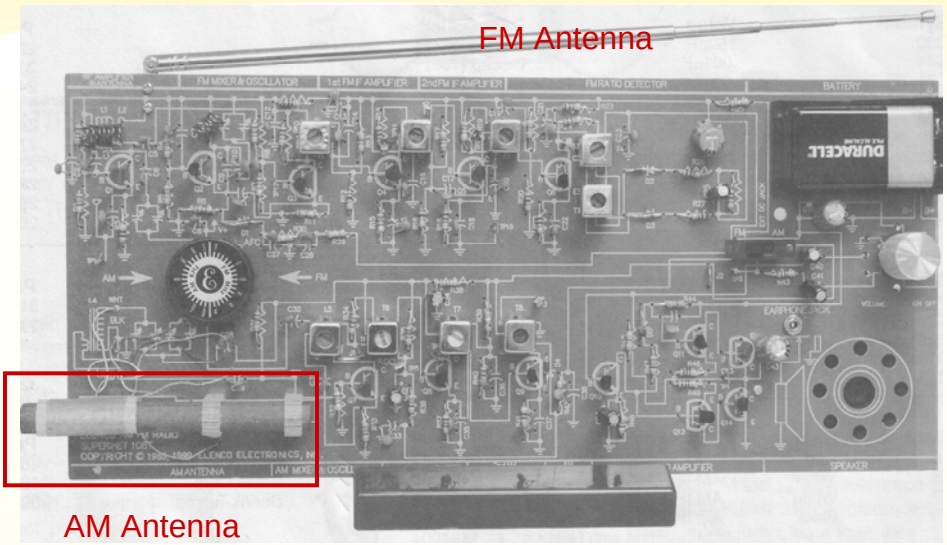

MONTANA STATE UNIVERSITY

Mountains & Minds

Super-Heterodyne AM Receiver

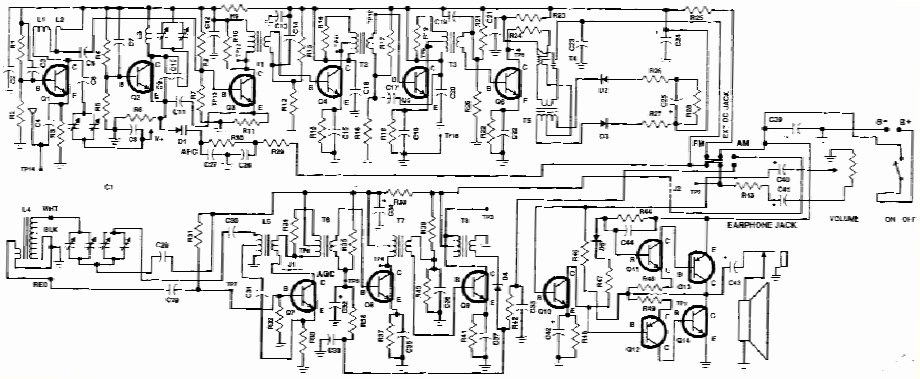

MONTANA STATE UNIVERSITY

Mountains & Minds

Super-Heterodyne AM Receiver

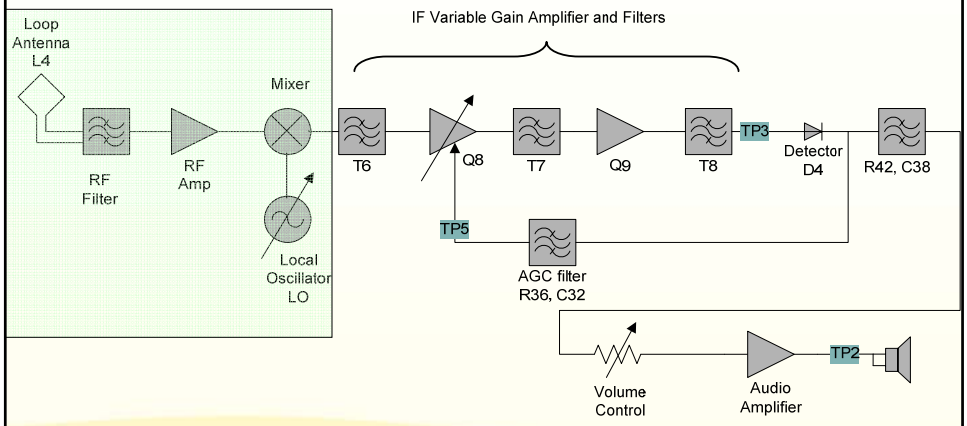

MONTANA STATE UNIVERSITY

Mountains & Minds

RF Filter

- Provides Image Rejection $f_{image}=f_{LO}+f_{if}$
- Reduces amplitude of interfering signals far from the carrier frequency
- Reduces the amount of LO signal that radiates from the Antenna

MONTANA STATE UNIVERSITY

Mountains & Minds

Figure 4–30 Spectra of signals and transfer function of an RF amplifier in a superheterodyne receiver.

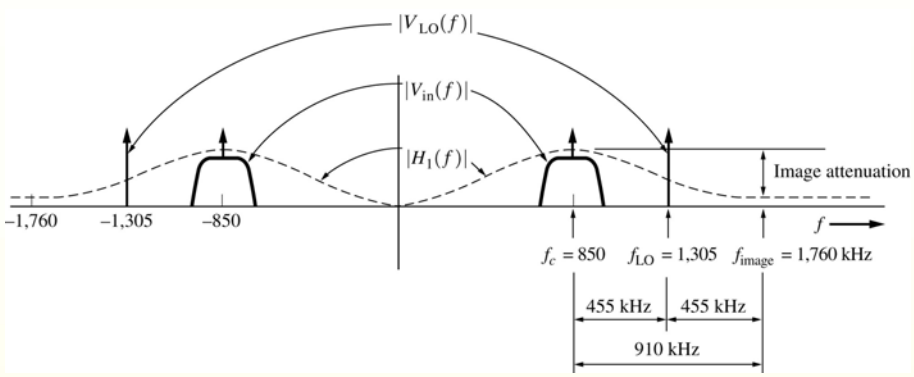

©2007 Pearson Education, Inc. All rights reserved. 0-13-142492-0

Figure 4–29 Superheterodyne receiver.

chapter 4-11

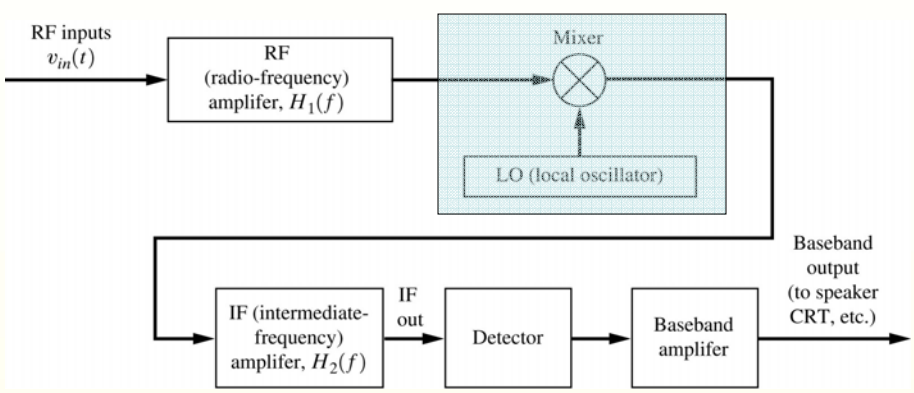

©2007 Pearson Education, Inc. All rights reserved. 0-13-142492-0

Mixer and LO

- The mixer produces

  $f_{SUM}=f_{LO}+f_{RF}$ and $f_{DIF}=f_{LO}-f_{IF}$
- The conventional AM radio uses the difference frequency – spectrum analyzers often use the sum frequency
- The LO (Local Oscillator) tunes the radio so that the desired input frequency passes through the IF filters.

MONTANA STATE UNIVERSITY

Mountains & Minds

Antenna, Mixer, LO

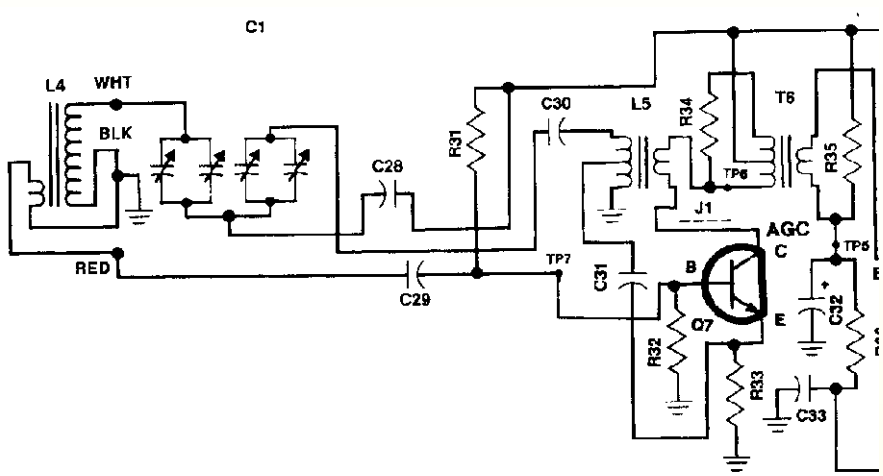

MONTANA STATE UNIVERSITY

Mountains & Minds

Super-Heterodyne AM Receiver

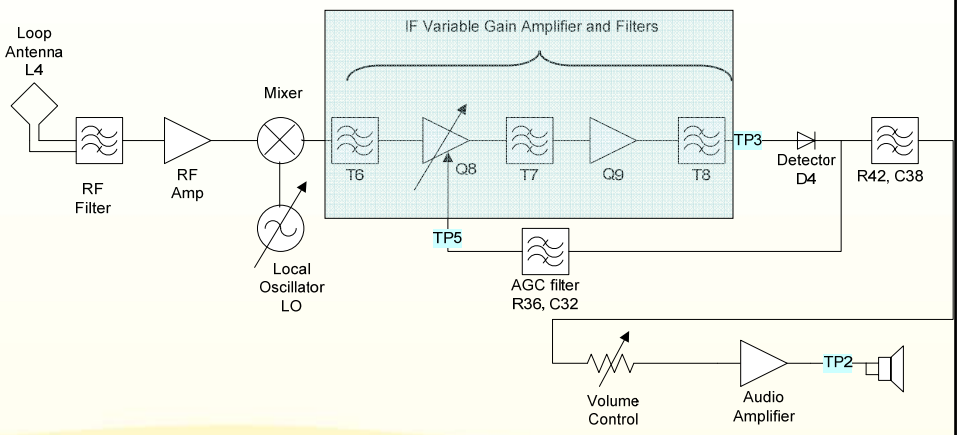

MONTANA STATE UNIVERSITY

Mountains & Minds

IF Amplifiers and Filters

- The IF filters:
  - The bandwidth is set wide enough to pass the transmitted signal
  - Provides adjacent channel rejection.
    - If we are tuned to 1400 KHz, the Adjacent channels are at 1390 KHz and 1410 KHz
  - This bandwidth determines the noise bandwidth of the receiver
  - The filter is optimized for IF frequency so all input signals pass through the same filters. This simplifies filter and amplifier design
  - The IF amplifier gain is variable to adjust for changes in the input signal power level. The received signal level may vary from < 1mV to over 1V (>60dB)
  - Note that an FM radio uses a limiting IF amplifier not a variable gain amplifier. See FM notes

MONTANA STATE UNIVERSITY

Mountains & Minds

TABLE 4–2 FILTER CONSTRUCTION TECHNIQUES

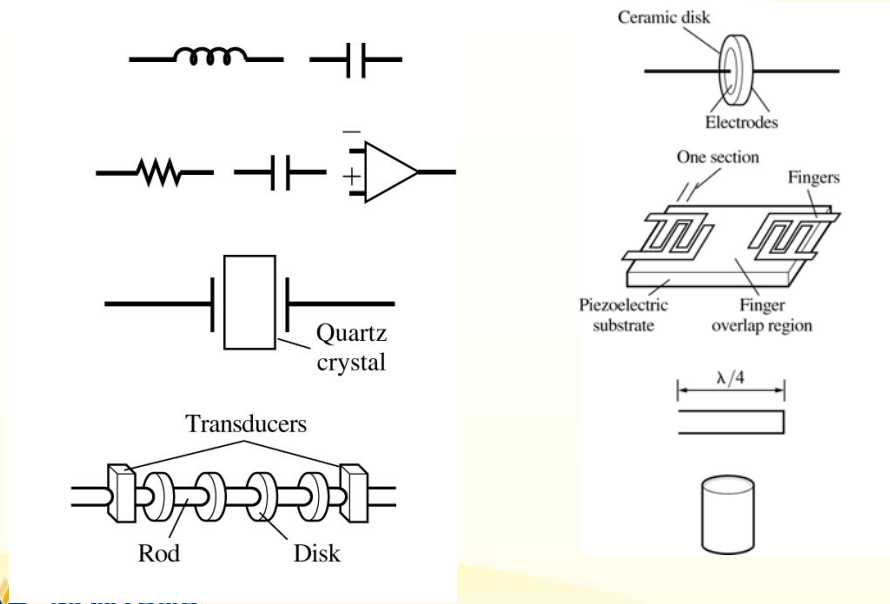

©2007 Pearson Education, Inc. All rights reserved. 0-13-142492-0

IF Amplifier

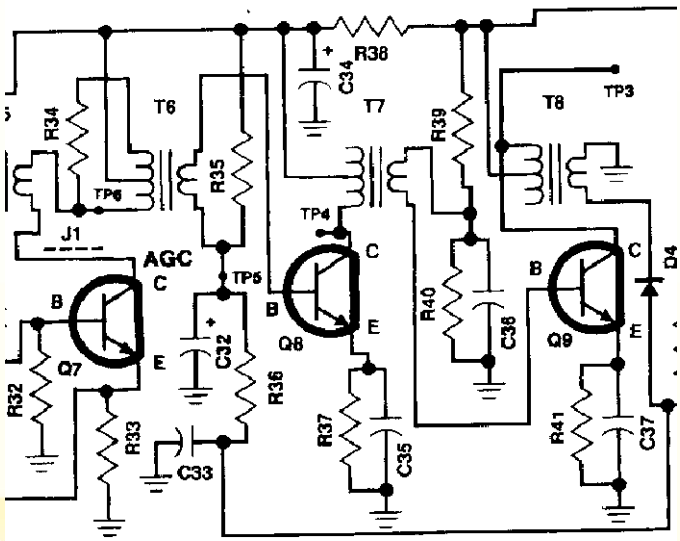

AGC-Automatic Gain Control

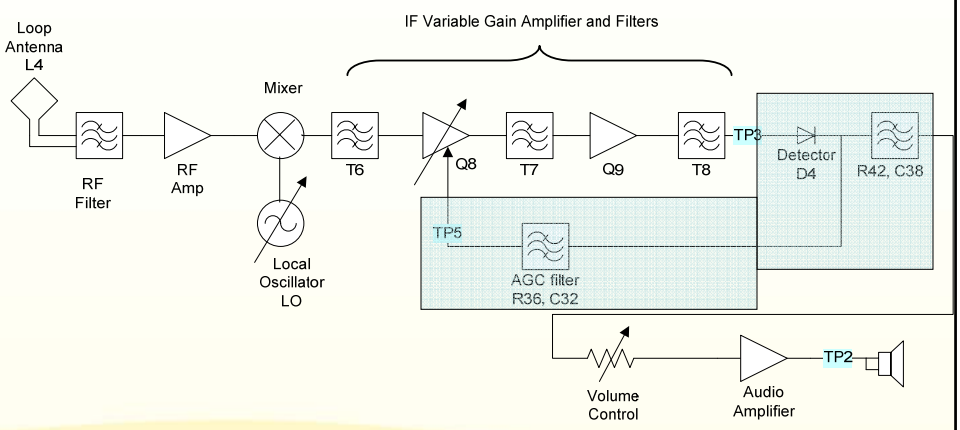

MONTANA STATE UNIVERSITY

Mountains & Minds

Envelope Detector

- The envelope detector recovers the original m(t) modulation and a DC voltage that is proportional to the received signal carrier amplitude A_c.
- The DC voltage is used to automatically adjust the gain of the IF amplifier in a control loop (AGC- automatic gain control). This maintains a constant recovered m(t) amplitude as the receiver input signal level changes, otherwise the volume would change as much as 60dB!

MONTANA STATE UNIVERSITY

Mountains & Minds

Envelope Detector

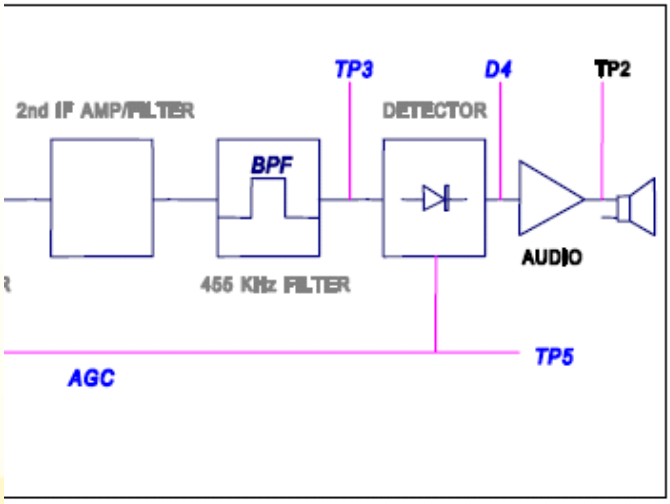

MONTANA STATE UNIVERSITY

Mountains & Minds

Envelope Detector

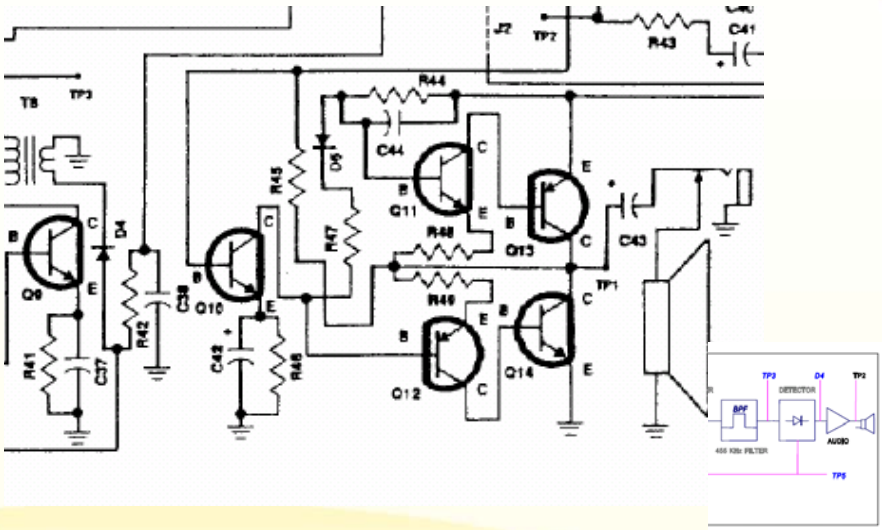

MONTANA STATE UNIVERSITY

Mountains & Minds

IF and AGC

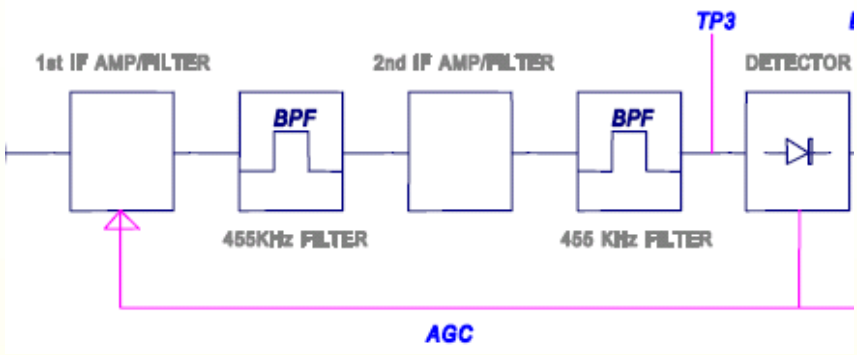

MONTANA STATE UNIVERSITY

Mountains & Minds

Detector, AGC, Audio

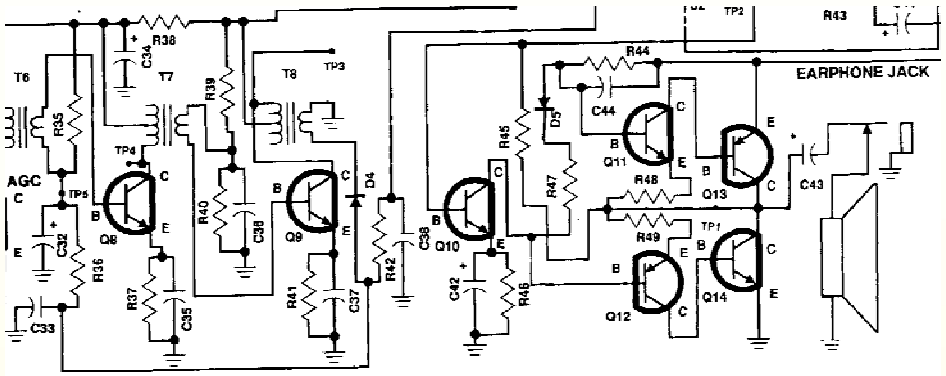

MONTANA STATE UNIVERSITY

Mountains & Minds

IF and agc

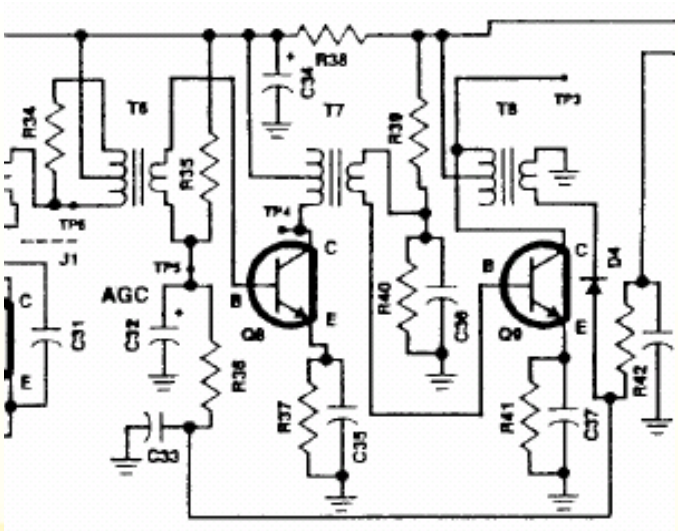

MONTANA STATE UNIVERSITY

Mountains & Minds

Heterodyne Converter (Frequency Translation) and RF filtering

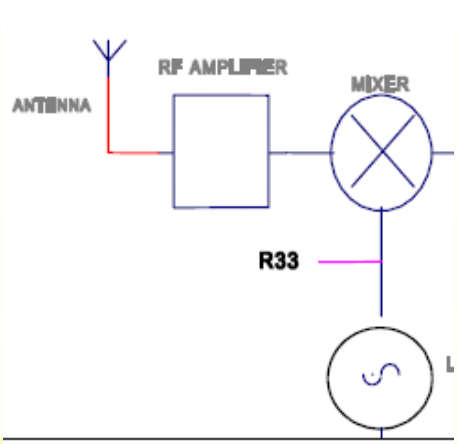

- Image Rejection
- Frequency Translation
- RF amplification
- LO- tuning

MONTANA STATE UNIVERSITY

Mountains & Minds

Heterodyne Converter

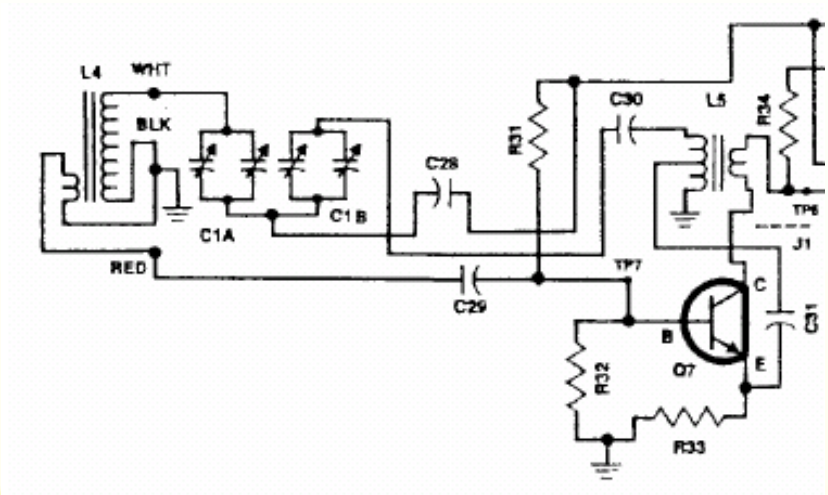

MONTANA STATE UNIVERSITY

Mountains & Minds